AMALIE®

Better than it has to be®
Since 1903

Multiple EURO Products Available

RAC PAC LUBE SYSTEM

The Answer to Making Smarter Lube Changes!

ADVANTAGES:

- » More convenient - less waste than using bottles
- » Time saved on oil/fluid changes keeps the momentum up
- » Improves inventory control
- » Integrated funnel with each pitcher for quick - no mess - easy pour
- » Less trash making it more environmentally friendly
- » Space saving rack allows multiple products in one spot, enabling a wide array of vehicles to be serviced more efficiently

Contact your sales associate today for more information on the **SMARTER Lube System!**

MADE IN U.S.A.

AMALIE

Better than it has to be®
Since 1903

RacPac Lube System

DESCRIPTION	PART #
AMALIE Elixir Full Synthetic EURO MID SAPS 0W-20, SP, SN PLUS/ACEA C5, VW 508/509	160-61650-21
AMALIE Elixir Full Synthetic EURO MID SAPS 5W-40, SQ, ACEA C3	160-65790-21
AMALIE Elixir Full Synthetic EURO MID SAPS 0W-30, SQ, ACEA C3	160-62310-21
AMALIE Elixir Full Synthetic EURO HIGH SAPS 0W-40, SQ, ACEA A3/B4	160-62370-21
AMALIE Elixir Full Synthetic 0W-16, SQ, GF-7B	160-65730-21
AMALIE Elixir Full Synthetic 0W-20 dexos1™ Gen 3 SQ, GF-7A	160-65750-21
AMALIE Elixir Full Synthetic 5W-20 SQ, GF-7A	160-75740-21
AMALIE Elixir Full Synthetic 5W-30 dexos1™ Gen 3 SQ, GF-7A	160-75760-21
AMALIE High Mileage Semi-Synthetic 5W-30, SQ, GF-7A	160-79460-21
AMALIE Imperial Turbo Semi-Synthetic 5W-20, SQ, GF-7A	160-71040-21
AMALIE Imperial Turbo Semi-Synthetic 5W-30, SQ, GF-7A	160-71060-21
AMALIE Imperial Turbo 10W-30, SQ, GF-7A	160-71070-21
AMALIE Super XLO Ultimate Full Synthetic Fortified with Molybdenum 5W-40, CK-4/SN	160-60190-21
AMALIE XLO Ultimate Synthetic Blend Fortified with Molybdenum 15W-40, CK-4/SN	160-79100-21
AMALIE XLO Ultimate Synthetic Blend Fortified with Molybdenum 10W-30, CK-4	160-79170-21
AMALIE Elixir DriveSync ULV Automatic Transmission Fluid	160-72820-21
AMALIE Elixir Universal Synthetic Automatic Transmission Fluid	160-72860-21
AMALIE RacPac 8 Position Rack	99935399
(8)-6 Quart Dispensers	99935199

DIMENSIONS

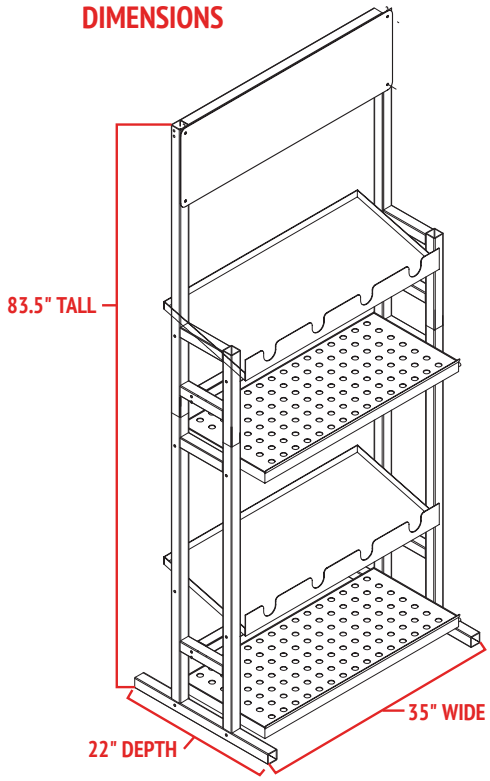

ATTRACTIVE PACKAGE DESIGN

More Product in **Less Space** makes it **More Convienient** allowing for **Quicker Service**...
Contact your sales assoiate today for more information on the **SMARTER Lube System!**

© 2026 AMALIE OIL COMPANY
-9-26

Amalie Oil Company • 1601 McCloskey Blvd. • Tampa, FL 33605, U.S.A. (813)248-1988 (813)248-1488 info@AMALIE.com AMALIE.com